# ISO 5199 STANDARD ADDRESSES TODAY'S RELIABILITY REQUIREMENTS FOR CHEMICAL PROCESS PUMPS

by

**Pierre H. Fabeck**

**Product Manager**

**Durco Europe**

**Brussels, Belgium**

**and**

**R. Barry Erickson**

**Manager of Engineering**

**The Duriron Company, Incorporated**

**Dayton, Ohio**

*Pierre H. Fabeck is Operations Manager for Pumps with Durco Europe in Brussels. He was previously responsible for the launch and development in Europe of Chemstar, Durco's newly developed ISO pump. Prior to joining Durco Europe in 1988, he spent eight years with Acec Pump Division in Belgium, where his last position was Chief Engineer. During his employment with Acec, Mr. Fabeck worked for one year at United Centrifugal Pumps, in San Jose, California.*

*He is a Graduate Engineer from Brussels University, and is affiliated with several professional associations in Belgium. He is also the author of several technical publications in the field of centrifugal pumps.*

*R. Barry Erickson is currently Manager of Engineering for the Pump Division of The Duriron Company, Inc. After receiving his Ph.D. from the University of Cincinnati, in 1971, where he was a faculty member for four years, he joined Allis Chalmers as a development engineer.*

*He has 18 years experience in engineering and research on centrifugal pumps and has authorized five technical papers. His present responsibilities include product engineering for the Pump Division of Duriron in Dayton, Ohio, and product development for all of Duriron's centrifugal pump operations. Professional affiliations include ASME, and Dr. Erickson is a Registered Professional Engineer in the State of Ohio.*

## ABSTRACT

The standards used so far by European manufacturers of chemical process pumps were only dimensional: ISO 2858, BS 24256, DIN 24256, NF E 44121. The pump manufacturer had total freedom of design provided outline dimensions were met. Therefore, many European users tend to specify API 610 for chemical duties where increased reliability is needed. By doing so, the user pays a premium for several features that are not necessarily needed in the application. Today, there is another ISO standard for process pumps which is intended to bring additional reliability: ISO 5199: "Technical Specifications for Centrifugal Pumps - Class II."

The progress is shown for a new design of an ISO pump developed to address users' needs. Several requirements of API 610 were incorporated in the design which exceeded all the requirements of ISO 5199. A comparison between API 610, ANSI B73.1 and ISO 5199 is also developed.

## INTRODUCTION

End suction pumps used in the chemical process industries are usually specified following one of the three well recognized pump standard organizations: American Petroleum Institute (API), American National Standards Institute (ANSI), or International Standards Organization (ISO). Practically, the current standards are: API 610, 7th edition [1]; ANSI B73.1M, 1984 [2] (new edition expected in early 1990) and ISO 2858, 2nd edition, 1975 [3].

Historically, the ISO standards originated in Europe and were mostly influenced by the German DIN standards. Since 1973, the ISO 2858 (defined as end suction centrifugal pumps—rating 16 bar—designation nominal duty point and dimensions) standard has been the most frequently specified standard in the European chemical industry. Many national standard organizations also have a standard for process pumps that is in accordance with ISO 2858.

For instance:

- France—NF E 44121
- Germany—DIN 24256
- United Kingdom—BS 5257

Usually, the national standard adds some requirements or combines several ISO standards into one national standard.

The ISO 2858 standard has often been perceived as the "European" equivalent to ANSI B73.1.

This understanding is correct, if the comparison is limited to *dimensions* and definition of *duty points* [4]. The basic difference between ANSI B73.1 and ISO 2858 is that the latter does not give any requirements about the pump's construction, whereas ANSI B73.1 gives several design and construction rules that improve the reliability and the safety of operation of the pump.

As no design requirement was included in this ISO 2858 standard, unlike ANSI, the pump manufacturer had total freedom of design provided outline dimensions were met. In many cases,

this led to a poor compromise on quality and reliability. Furthermore, the first generation of chemical process pumps, were designed for shaft sealing by packed gland. Their original design did not meet the specific requirements of modern mechanical seals.

It it therefore not a surprise to hear users complaining about seals and bearings as they represent 90 percent of their pump failures.

It is generally recognized that a considerable amount of seals and bearing failures are inter-correlated and mainly due to inadequate pump design. The main causes of these problems are related to the following weaknesses:

- too small shaft diameters
- too large shaft overhang
- uncontrollable seal chamber pressure
- high and uncontrollable axial loadings
- axial thrust reversal
- poor seal environment
- insufficient concentricity between rotating and stationary parts
- detrimental effect of wear
- oil contamination

For this reason, many European users tend to specify API 610 or ANSI B73.1, for duties where increased reliability is needed.

Fortunately, today there is another ISO standard for process pumps that brings additional reliability: ISO 5199 "Technical Specifications for Centrifugal Pumps-Class II" [5]. Officially released in 1986, after having existed several years under the draft status (DIS), this standard specifies most of the important design parameters such as maximum shaft deflection, casing rigidity, bearing life, vibration level, and corrosion allowance, along with a lot of mechanical features that ensure a trouble-free operation of the pump.

It must be pointed out that this standard is not yet mandatory, and that its requirements come in addition to the "dimensional" requirements of ISO 2858 (BS 24256, DIN 24256, NF E 44.121), so there is no conflict between the "old" standard and the "new" one.

Very few chemical process pumps in Europe meet all the recommendations of ISO 5199.

The purpose herein is to show how an upgraded version of an ISO pump was developed in order to address the user's need. It will be shown how ISO 5199 was integrated in this development, and why it was decided to exceed certain of its requirements.

## DIMENSIONS

The following table gives a comparison of several dimensional features of the ANSI and the ISO ranges:

| | ANSI B 73.1 | ISO 2858 |
|---|---|---|
| Number of models | 19 | 34 |
| Impeller sizes | 6",8",10",13",15" | 125,160,200,250, 315,400 mm |
| Pressure rating | ANSI class 125 for cast iron ANSI class 150 for steel | 16 bar |

The respective ANSI and ISO duty points are shown in Figure 1, at 1450 rpm. One interesting point about the dimensions is that the ISO pump is usually longer than the "equivalent" ANSI pump, but its overall height is smaller. Both ANSI and ISO standards call for the "back pullout" capability (Figure 2).

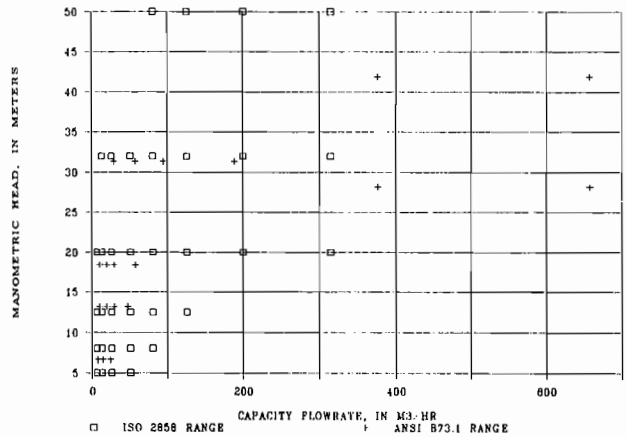


*Figure 1. ISO Vs ANSI Performance Range at 1450 RPM.*

Also shown in Figure 1 is the capacity/head coverage is achieved in the ISO range with a higher number of models, which suggests that ISO pumps would operate closer to BEP conditions than ANSI pumps. This, of course, has a significant influence on pump reliability, as it is well known that running far from BEP conditions increases vibration and shaft deflection.

Also, it may be seen from Figure 1 that there is no ANSI coverage for the low flow, high head portion, which suggests that the ISO range includes impellers with lower specific speed values.

Another difference is in the pump/motor assembly:

| | ANSI | ISO |
|---|---|---|
| Baseplate selection | Only on basis of the motor frame. | On basis of the combination of motor frame and pump size. |
| Spacer length | 3¼ in. minimum | Depending on pump size either 100, 140 or 180 mm. |
| Pump/motor alignment | Mounting blocks under motor only. | Mounting blocks under motor and/or pumps. |

## TRADITIONAL SEALING ARRANGEMENTS

The recent 7th edition of API 610, and some proposals already publicized on the coming ANSI B73 new edition, confirms the emphasis being put by seal makers and by several pump manufacturers on the seal environment, particularly the need for enlarged seal chambers.

The trend for enlarged seal chambers is also showing in Europe, but to a smaller extent because, as will be shown, the applicable European standards are more friendly to the seals than ANSI.

The only recognized European standard for seal dimensions is DIN 24960 [6]. The typical layout of such a seal is shown (Figure 3) in the U form (unbalanced) or in the B form (balanced). This standard dictates the dimensions of the seat, which is always O-ring mounted (no clamped seats), along with the overall seal dimensions. Axial and longitudinal pins to block the seat are optional.

Two designs are available: the "long" design, and the most popular "short" design, designated by $L_{1k}$. Most sealmakers offer in Europe "short" seals in accordance with DIN 24960. Their main advantage is that they reduce the overall length of the sealing chamber in the case of double seals arranged back-to-back, which has a beneficial effect on the shaft overhang.

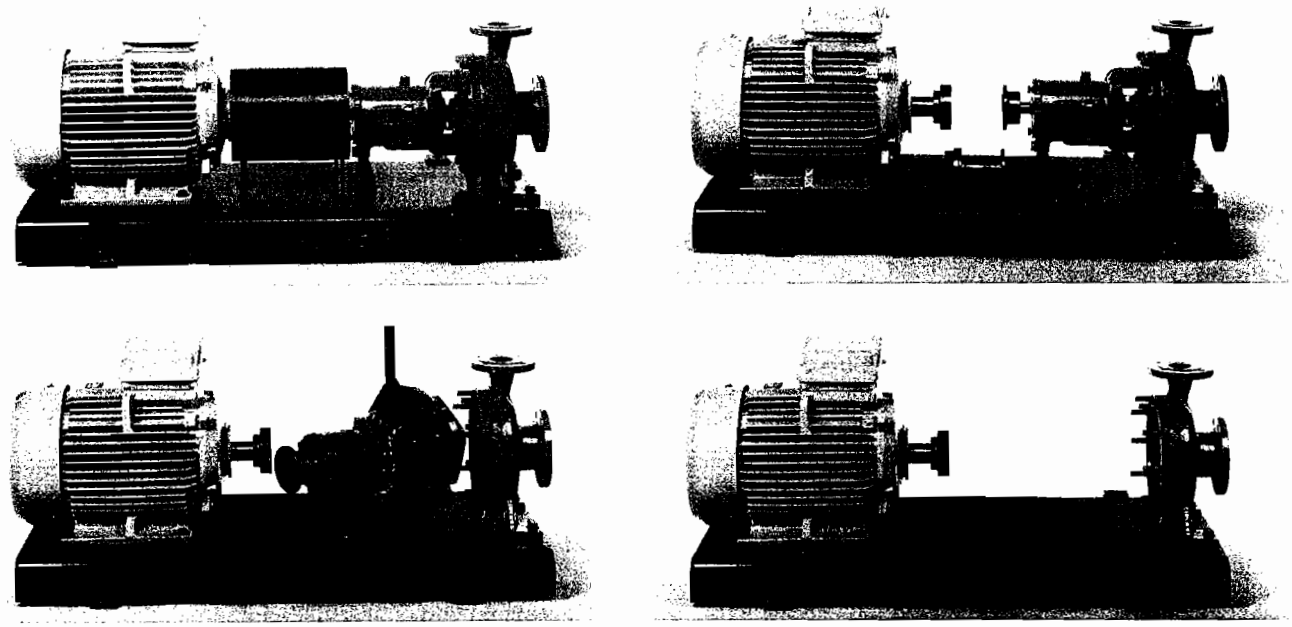

*Figure 2. Back Pullout Capability.*

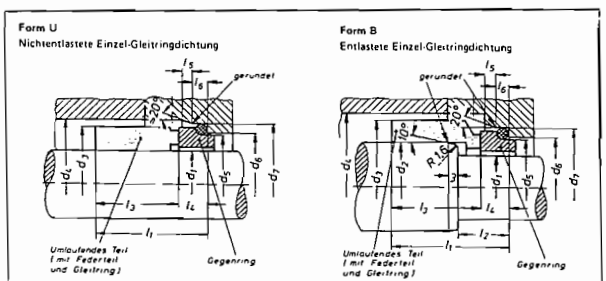


| $d_1$ Nenndurchmesser Form U h6 | Form B h6 | $d_2$ h6 | $d_3$ 1) Großmaß Form U | Form B | $d_4$ 1) Kleinstmaß Form U | Form B | $d_5$ h8 | $d_6$ H11 | $d_7$ H8 | $d_8$ | $d_9$ Form U H8 | Form B H8 | c | $l_1$ Ausführung N 2) Form U ±0,5 | Form B ±0,5 | Ausführung K Form U ±0,5 | Form B ±0,5 | $l_2$ ±0,5 | $l_3$ $l_4$ | $l_5$ | $l_6$ | $l_7$ |
|---|---|---|---|---|---|---|---|---|---|---|---|---|---|---|---|---|---|---|---|---|---|---|
| 10 | | 14 | 20 | 24 | 22 | 26 | Die Maße sind nicht festgelegt. Sie können bei den Gleitringdichtungs-Herstellern verschieden sein und sind deren Unterlagen zu entnehmen. | 17 | 21 | 3 | 26 | 30 | 4 | 40 | 50 | 32,5 | 40 | 18 | 2 | 1,5 | 4 | 8,5 |
| 12 | | 16 | 22 | 26 | 24 | 28 | | 19 | 23 | | 28 | 32 | | | | 35 | 42,5 | | | | | | |
| 14 | | 18 | 24 | 32 | 26 | 34 | | 21 | 25 | | 30 | 38 | | 45 | 55 | | | 20 | | 5 | | 9 |
| 16 | | 20 | 26 | 34 | 28 | 36 | | 23 | 27 | | 32 | 40 | | | | | | | | | | |
| 18 | | 22 | 32 | 36 | 34 | 38 | | 27 | 33 | | 38 | 42 | | | 60 | 37,5 | 45 | | | | | |
| 20 | | 24 | 34 | 38 | 36 | 40 | | 29 | 35 | | 40 | 43 | | | | | | | | | | |
| 22 | | 26 | 36 | 40 | 38 | 42 | | 31 | 37 | | 42 | 46 | | | | 40 | 47,5 | | | | | |
| 24 | | 28 | 38 | 42 | 40 | 44 | | 33 | 39 | | 43 | 48 | | 50 | | | | | | | | |
| (25) | | 30 | 39 | 44 | 41 | 46 | | 34 | 40 | | 46 | 50 | | | | | | | | | | |
| 28 | | 32 | 42 | 47 | 44 | 49 | | 37 | 43 | | 48 | 53 | | | 65 | 42,5 | 50 | | | | | |
| (30) | | 35 | 44 | 49 | 46 | 51 | | 39 | 45 | | 50 | 60 | | 55 | | | | | | | | |
| (32) | | 36 | 46 | 54 | 48 | 58 | | 42 | 48 | | 53 | 62 | | | | | | | | | | |
| 33 | | 38 | 47 | 54 | 49 | 58 | | 42 | 48 | | 53 | 62 | | | | | | | | | | |
| (35) | | 40 | 49 | 56 | 51 | 60 | | 44 | 50 | | 60 | 65 | | | | | | | | | | |
| 38 | | 43 | 54 | 59 | 58 | 63 | | 49 | 56 | | 62 | 67 | | | 75 | 45 | 52,5 | 23 | | | | |
| (40) | | 45 | 56 | 61 | 60 | 65 | | 51 | 58 | | 65 | 70 | | | | | | | | | | |
| 43 | | 46 | 59 | 64 | 63 | 68 | | 54 | 61 | | 67 | 72 | | 60 | | | | | | | | |
| (45) | | 50 | 61 | 66 | 65 | 70 | | 56 | 63 | | 70 | 75 | | | | | | | | | | |
| 48 | | 53 | 64 | 69 | 68 | 73 | | 59 | 66 | | 72 | 77 | | | 85 | 47,5 | 57,5 | | | | | |
| (50) | | 55 | 66 | 71 | 70 | 75 | | 62 | 70 | | 75 | 86 | | | | | | | | | | |
| 53 | | 58 | 69 | 78 | 73 | 83 | | 65 | 73 | | 77 | 88 | | | | | | | | | | |
| 55 | | 60 | 71 | 80 | 75 | 85 | | 67 | 75 | | 86 | 91 | | 70 | | | | 25 | | | | |
| (58) | | 63 | 78 | 83 | 83 | 88 | | 70 | 78 | | 88 | 93 | | | | 52,5 | 62,5 | | | | | |
| 60 | | 65 | 80 | 85 | 85 | 90 | | 72 | 80 | 4 | 91 | 96 | 6 | | 95 | | | | | | | |
| (63) | | 68 | 83 | 88 | 88 | 93 | | 75 | 83 | | 93 | 98 | | | | | | | | | | |
| 65 | | 70 | 85 | 90 | 90 | 95 | | 77 | 85 | | 96 | 103 | | | | | | | | | | |
| (68) | | – | 88 | – | 93 | – | | 81 | 90 | | 98 | – | | 80 | | | | | | | | |
| 70 | | 75 | 90 | 99 | 95 | 104 | | 83 | 92 | | 103 | 108 | | | | | 70 | | | | | |
| 75 | | 80 | 99 | 104 | 104 | 109 | | 88 | 97 | | 108 | 120 | | | | 60 | | 28 | | | | |
| 80 | | 85 | 104 | 109 | 109 | 114 | | 95 | 105 | | 120 | 125 | | 90 | 105 | | | | | | | |
| 85 | | 90 | 109 | 114 | 114 | 119 | | 100 | 110 | | 125 | 130 | | | | | 75 | | | | | |
| 90 | | 95 | 114 | 119 | 119 | 124 | | 105 | 115 | | 130 | 135 | | | | 65 | | | | | | |
| 95 | | 100 | 119 | 124 | 124 | 129 | | 110 | 120 | | 135 | 140 | | | | | | | | | | |
| 100 | | 105 | 124 | 129 | 129 | 134 | | 115 | 125 | | 140 | 145 | | | | | | | | | | |

*Figure 3. Seal Dimensions as for DIN 24960.*

As an addition to ISO 2858, another standard was issued in 1974, to specify the dimensions of the seal chamber or the stuffing box: ISO 3069 "End suction centrifugal pumps—dimensions of cavities for mechanical seals and for soft packing" [7]. This standard is summarized in Figure 4. Most chemical process pumps in Europe were developed 15 to 20 years ago, when shaft sealing was still mainly achieved by packed gland. In these designs, the same rear cover must be able to accommodate packing

**End suction centrifugal pumps — Dimensions of cavities for mechanical seals and for soft packing**

1 SCOPE AND FIELD OF APPLICATION

This International Standard specifies the dimensions of the cavity for balanced and unbalanced mechanical seals and for soft packing for use with end suction centrifugal pumps, rating 16 bar, in accordance with ISO 2858. It can, however, apply to other rotating machinery.

2 REFERENCE

ISO 2858, *End-suction centrifugal pumps for chemical liquids (rating 16 bar) – Designation, nominal duty point and dimensions.*

3 SPECIFICATION OF DIAMETERS OF SHAFTS AND CAVITIES

The diameters shown in figures 1, 2 and 3 shall have the values given in the table.

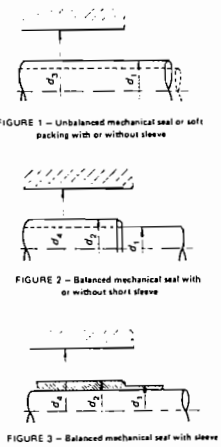


Dimensions in millimetres

| $d_1$ | $d_2$ | $d_3$ | $d_4$ |
|---|---|---|---|
| 18 | 22 | 34 | 38 |
| 20 | 24 | 36 | 40 |
| 22 | 26 | 38 | 42 |
| 24 | 28 | 40 | 44 |
| 25 | 30 | 41 | 46 |
| 28 | 33 | 44 | 49 |
| 30 | 35 | 46 | 51 |
| 32 | 38 | 48 | 58 |
| 33 | 38 | 49 | 58 |
| 35 | 40 | 51 | 60 |
| 38 | 43 | 58 | 63 |
| 40 | 45 | 60 | 65 |
| 43 | 48 | 63 | 68 |
| 45 | 50 | 65 | 70 |
| 48 | 53 | 68 | 73 |
| 50 | 55 | 70 | 75 |
| 53 | 58 | 73 | 83 |
| 55 | 60 | 75 | 85 |
| 58 | 63 | 83 | 88 |
| 60 | 65 | 85 | 90 |
| 63 | 68 | 88 | 93 |
| 65 | 70 | 90 | 95 |
| 68 | – | 93 | – |
| 70 | – | 95 | – |

*Figure 4. Seal Chamber Dimensions as for ISO 3069.*

or an unbalanced mechanical seal. Looking at the seal dimensions of DIN 24960 and the seal cavities from ISO 3069, we can see that the radial clearance at the outboard of the seal is fairly limited on this first generation of pumps.

*Example:*

- Shaft dia 33 mm
- Bore of stuffing box 49 mm
- External dia of standardized unbalanced seal 47 mm
- Radial clearance = 1 mm

It has been proven by several authors [i.e., 8] that a radial clearance of 1.0 mm is not sufficient to provide adequate heat exchange around the seal faces. Therefore, it is not surprising to learn that these "classical" ISO pumps are experiencing a number of problems when retrofitted with mechanical seals.

Furthermore, these "classical" pumps cannot accommodate a balanced seal without having to rebore the stuffing box to a larger diameter, which is most of the time a post design modification with some drawbacks.

A more friendly approach for the seal is to develop a special seal chamber for balanced mechanical seals, but staying within the constraints of ISO 3069. This concept is being offered by a few European manufacturers.

The dimensions now became:

- Shaft dia 33 mm/38 mm
- Bore of seal chamber is 58 mm
- External dia of unbalanced seal is 47 mm
- External dia of balanced seal is 54 mm
- Radial clearance with U seal 5.5 mm
- Radial clearance with B seal 2 mm

Practically all unbalanced seals are able to withstand a pressure of at least 10 bar, so the majority of chemical process duties call for unbalanced seals, where the radial clearance is 5.5 mm.

So, a major difference between ANSI and ISO is that the ISO seal cavity dimensions are larger and allow up to 5.5 mm radial clearance , *providing a specific rear cover be designed for seals only.* This is not the case with the existing ANSI dimensions; therefore, several US pump manufacturers have anticipated the upcoming new edition of ANSI and are already proposing enlarged seal chambers.

Before we go in detailed comparison of standards it is necessary to elaborate on two design features where, mostly for historical reasons, the classical "European" process pump differs from its American cousin.

## IMPELLER TYPE

The classical impeller designs shown in Figure 5 are offered by European makers.

Type (a) is by far the most popular: a fully shrouded impeller fitted on the back with pumping vanes (also called "back ribs") to decrease the seal chamber pressure and balance the axial thrust. It must be noted that there is no leakage flow on the back of the impeller, nor wear rings, so it is an economical solution to achieve good efficiencies by limiting internal volumetric losses.

Type (b) is similar to the API construction with wear rings on both sides of the impeller and balance holes to control seal chamber pressure and hydraulic axial thrust.

Type (c) is a semiopen impeller adjusted against a wear plate fitted in the casing.

These three types of impellers are driven by shaft keys and held in place by a locknut.

Users usually report the following problems experienced with these classical designs:

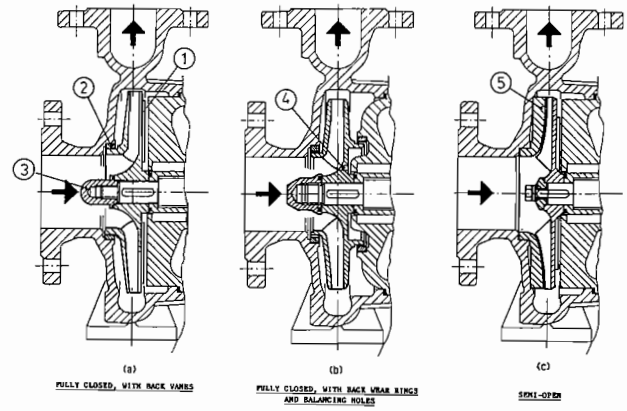


*Figure 5. Usual Types of Impellers in Europe.*

### *Impeller Locknut*

While it is obvious that the important HP absorbed by most API pumps call for a keyed impeller, the requirements of chemical duties are totally different:

- in driving force: most chemical duties call for motor ratings lower than 50 kW.
- in environment: the extremely corrosive duties encountered in the chemical industry tend to deteriorate the locknut gasket, exposed to the turbulence of the suction stream. When this gasket fails, the locknut threads get badly corroded, and the impeller dismantling becomes extremely difficult.
- another disadvantage of the locknut, particularly in the small sizes encountered in the chemical pumps, is its "eye area blockage effect" which deteriorates significantly the NPSH performance.
- also, the lack of tight fit between impeller and shaft allows relative motion, fretting, and occasional failure of the shaft at the threads.

### *Wear Rings and Wear Plates*

By definition, these parts are subject to wear and need to be regularly replaced. Apart from the cost of inventory and labor, the major problem related to these wear parts is that they cannot be removed from the casing "onsite." The set screws are usually corroded, there has been fretting corrosion between the wear part and the casing, and it is, most of the time, necessary to machine out the old part in order to remove it. To do so, the user needs to bring the pump casing in the workshop, and therefore, he has to disturb the pipework. So, in practice, the theoretical back pullout "advantage" is partly lost when the pump is fitted with wear rings or wear plates.

Many duties in the chemical process industries use solids containing liquids, which tend to clog a fully shrouded impeller. The semiopen impeller, illustrated in Figure 5, Type C, has to be adjusted against the wear plate, installed in the casing. As one has to set the impeller prior to adjusting the mechanical seal, with this design, the pump needs to be fully assembled in order to do a seal adjustment, which again eliminates the advantage of the back pullout capability.

### *Back Pumping Vanes*

Pumping vanes are still widely used in Europe, despite many shortcomings that explain why API 610 forbids the use of pumping vanes for pumps fitted with mechanical seals [6 (2.1.7)].

The following shortcomings are usually reported when using pumping vanes:

• They need a special trimming procedure that is not necessarily the same as the impeller trimming. In other words, sometimes you need to trim the pumping vanes differently than the impeller shrouds and/or vanes.

• They can produce negative pressure in the seal chamber, which is highly detrimental to seal performance, as it allows air to come in the seal chamber.

• As most impellers used in the chemical industry are in 316 stainless steel, these pumping vanes will wear pretty fast on erosive liquids, and after a few months of operation, it will not be surprising to experience high seal chamber pressure and/or high axial thrust, because the width of the pumping vane has decreased. Stepanoff [9] has clearly demonstrated how sensitive the pressure distribution on the back of the impeller is, when the width of the ribs decreases.

There are over 30 manufacturers of chemical process pumps in Europe, so all designs cannot be summarized. It is, nevertheless, believed that Figure 5 represents more than 90 percent of the available constructions.

## INBOARD BEARING

Many European designs call for a roller type inboard bearing, such as represented on Figure 6 b.

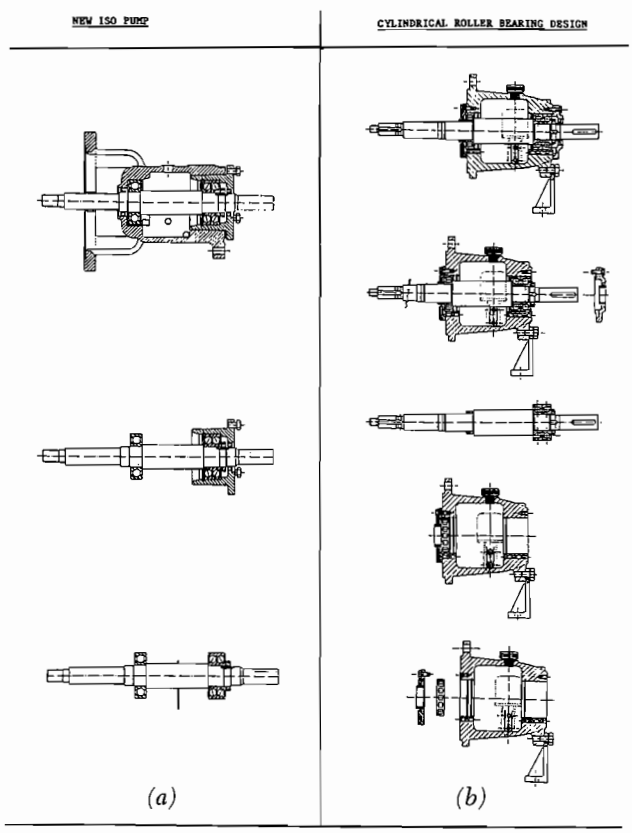


*Figure 6. Ball Bearing* Vs *Roller Bearing.*

The main advantage of the roller bearing is its higher dynamic loading capability, about 50 percent higher than a deep groove ball bearing for the same outside diameter.

*Example:* antifriction bearing 35 × 80 mm C=dynamic load capacity
roller type: NU 307 C=49.5 kN
deep-grove ball type: 6307 C3 C=33.5 kN

Therefore, roller type bearings may be needed in pump designs where high radial loadings are exerted on the inboard bearing. This situation can happen in one of the following cases:

• small shaft diameters
• long overhang
• high radial load

But the roller type bearing has several drawbacks:

*Dismantling*

The dismantling of a roller type bearing is, as shown in Figure 6 b, very fastidious, compared to a ball bearing design.

*Overheating*

When the pump is operated close to BEP, the roller bearing tends to heat 10 to 15°C more than a ball bearing [10].

*Loss of internal clearance*

The outer cage of the roller bearing is not allowed to move *vs* the bearing housing: a tighter fit is, therefore, necessary at the outer cage which makes the roller bearing more sensitive to a loss of internal clearance (preload) due to the thermal expansion of the shaft. This phenomenon reduces the actual radial loading capacity of the roller bearing.

*Susceptibility to emprinting of the cages*

This phenomenon is well known by offshore users: when high vibrations are transmitted to a standby pump, this causes imprints on the cages, which deteriorates the bearing when the pump is started. Roller bearings are much more susceptible to cage imprinting because they have one degree of freedom less than ball bearings where the balls can glide in all directions.

Several major users in Europe begin to recognize the higher reliability of inboard ball bearings *vs* roller bearings. This problem does not exist in the USA, where ball bearings have been used for decades on API and ANSI pumps.

## NEW ISO PUMP DESIGN

A new ISO pump was developed and brought to the market in order to address the new challenges set by pump users and illustrated by the new ISO 5199 standard. For the ease of the presentation, this pump will be called "the new ISO pump."

A sectional drawing of the new ISO pump is shown in Figure 7. A cutaway view and a bare shaft pump are shown respectively in Figures 8 and 9.

## IMPELLER

One major feature of the new ISO pump is the setting of the impeller against the rear cover plate. The back of the impeller

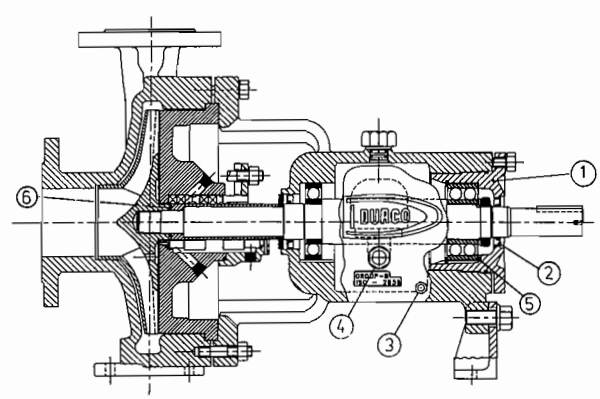


*Figure 7. Sectional Drawing—New ISO Pump.*

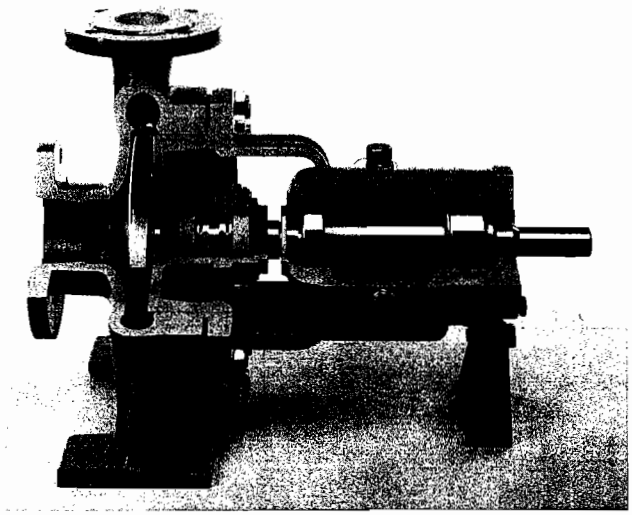

*Figure 8. Cutaway View—New ISO Pump.*

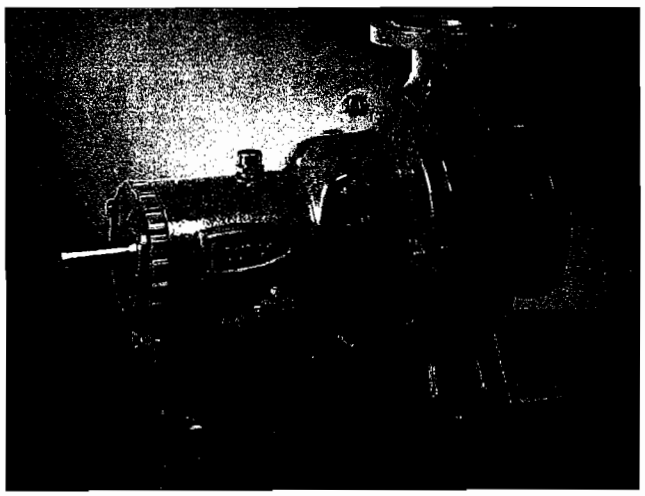

*Figure 9. Bareshaft New ISO Pump.*

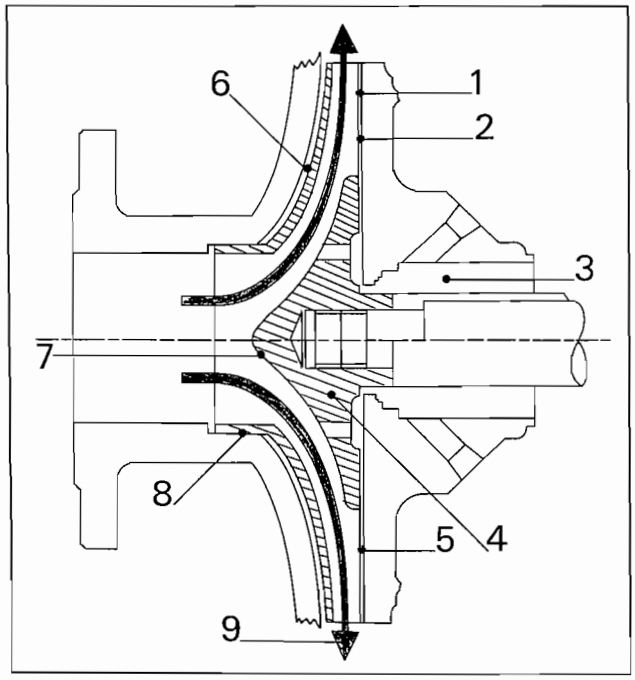


*Figure 10. New ISO Pump—Impeller Principle.*

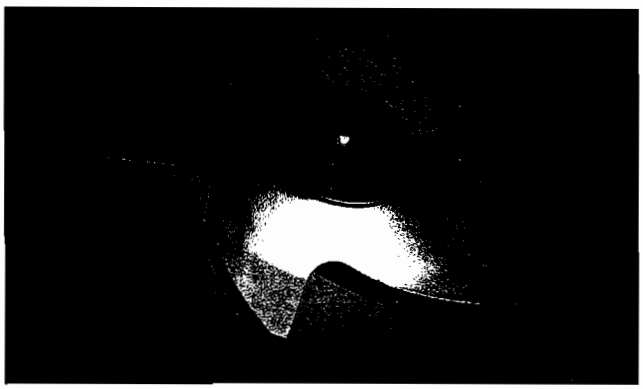

*Figure 11. Impeller.*

is open, so that this impeller has higher solids-handling capabilities. The principle of the impeller is illustrated in Figure 10, while a picture of the impeller is shown in Figure 11.

Balance holes located in the impeller eye allow an internal leakage to take place on the back of the impeller. The controlled clearance between impeller and rear cover controls the amount of leakage. An external shaft adjustment system, consisting of an adjustable bearing carrier (Figure 7, 1), enables the clearance between impeller and rear cover to be restored quickly and accurately from outiside, without having to open the pump.

A "blind" adjustment is made possible by the use of calibrated notches located on the carrier. This external adjustment system is required by ISO 5199 (4.8.3) for those impellers which need an axial adjustment. It must be noted that nothing is mentioned in API 610 with respect to external adjustment, one might question here whether the closed impellers fitted with pumping back vanes should be considered as "needing an axial adjustment." Most constructions do not have any external means of resetting the clearance between the back vanes and the rear cover, which has a predominant effect on the pressure distribution along the back shroud of the impeller [9].

In the new ISO pump, balancing holes, combined with the controlled rear cover setting, reduce and control both the seal chamber pressure and the axial thrust. Seal chamber pressure is low and repeatable, so curves showing seal chamber head *vs* capacity can be provided (Figure 12). This results in extended seals and bearing life.

Most chemical pumps are subject to seal chamber and axial thrust increases with internal wear. In the case of double seals, an uncontrollable increase inseal chamber pressure can cause the latter to become higher than the buffer fluid, which provokes an inversion of the leakage flow between the seal faces, allowing the pumped liquid to contaminate the buffer fluid.

The need for controlling seal chamber pressure is recognized by API 610, which bans the use of pumping vanes or back ribs (2.6.1) to establish axial balance of the rotor.

It was decided to use the latest investment casting techniques (lost wax method) to produce the impellers. This choice is aimed at compensating for the relative loss of efficiency caused by the internal leakage flow through the balance holes. The superior hydraulic efficiency derived from the better surface roughness

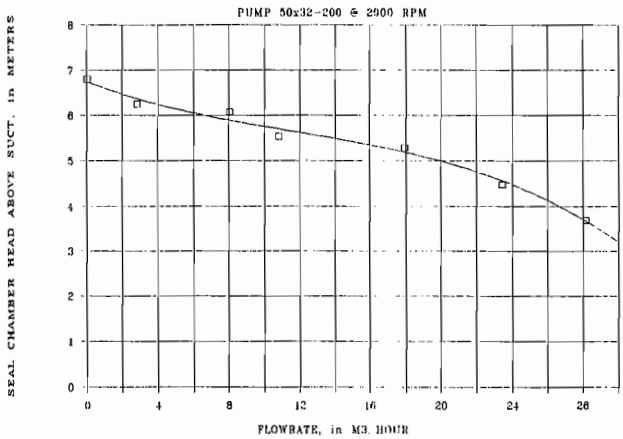


*Figure 12. Typical Graph of Seal Chamber Pressure* Vs *Capacity.*

of the investment cast impeller resulted in an overall efficiency comparable to the best performing fully closed impellers fitted with back ribs.

The standard impeller material for most duties is duplex stainless steel ASTM A 744 Gr CD4M Cu, which is 80 HBN harder than regular 316 stainless steel, and thus, less likely to wear due to erosion or cavitation. In particular, this impeller alloy is standard on all pumps in ductile cast iron, cast steel, 316 stainless steel and duplex stainless steel. This provides maximum interchangeability. This also satisfies para 2.6.4 of API 610, which calls for a minimum hardness difference of 50 HBN between wear surfaces. Neither ANSI nor ISO have such a requirement. The CD4M material is also more resistant to chemical attack in most applications. Due to the difference in hardness, most of the wear is concentrated on the rear cover, whose wearing area is about four to five times the area of a regular wear ring. This rear cover is, therefore, the only major part susceptible to wear and up to 3.0 mm of wear can be compensated by readjusting the impeller as the design includes a 3.0 mm corrosion allowance.

Another feature of the new ISO pump impeller is that it is screwed against a shoulder on the shaft which eliminates the need for a locknut. This allows the inlet of the impeller to be profiled for optimum hydraulic flow, resulting in lower NPSH values and longer pump life when operating under low suction pressures (Figure 10, 7). The PTFE gasket confined between impeller and shaft sleeve protects both the shaft threads and the shaft/sleeve interface (Figure 7, 6). This confined "O-ring" type gasket is much less subject to potential failure than a classical locknut gasket such as shown in Figure 5, 6. This addresses the general need of chemical pumps to avoid threads in wetted parts.

The absence of back wear ring or pumping vane allows the shaft overhang to be reduced, which lowers the shaft deflection and also the loadings on the inboard bearing, due to radial forces exerted on the impeller (Figure 10, 9).

Last, the inside of the casing is machined in front of the impeller (Figure 10, 6), so that a reduced impeller/casing gap is created on the whole front area of the impeller. This closed clearance (+/− 2-3 mm) chokes the front leakage flow in such a way that it is no longer necessary to use small clearances on the annular ring part of the impeller. This obviates the need for a front wear ring, which consists in a major advantage to the users in the chemical industry. As no wear parts are to be fitted in the casing, the latter may remain connected to the piping during all types of maintenance operations. There is no need to bring back the casing to the shop for retrofitting new wear rings.

Apart from the fact that no wear rings must be stocked, this is seen as a particular advantage to the users in the chemical industry:

- Due to corrosive attack, and particularly "fretting" corrosion, the wear ring/casing interface and the set screw threads are very often badly corroded, which makes the removal of the old wear ring sometimes very difficult (must be machined out sometimes).
- In the applications where casing jackets and/or special thermal insulation are necessary, the necessity to remove the casing is a strong disadvantage.

The standard values of the annular diametral ring clearance of the new ISO pump is 0.9 mm, while most classical process pumps have values between 0.4 and 0.6 mm diametral.

Typical values are shown in Figure 13 of annular clearances found in process pumps, as well as the minimum clearances recommended by API 610. This makes the new ISO pump less sensitive to wear as its performance (head, efficiency) will deteriorate at a slower rate than a classical pump.

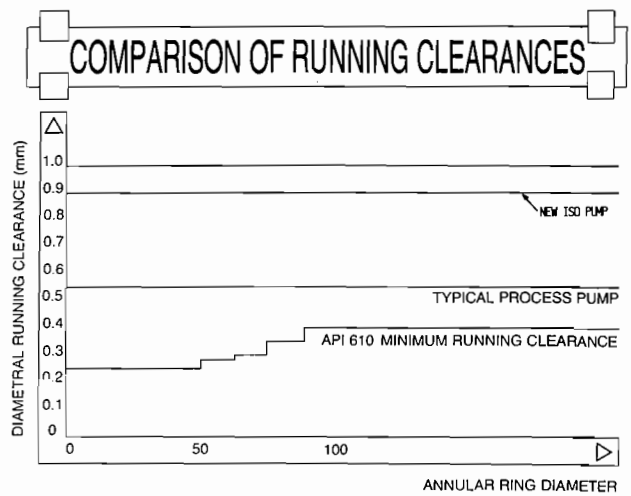


*Figure 13. Front Annular Clearance.*

This has been proven both in the field and by many laboratory tests. The following table shows the average mean decrease in efficiency and head on the "Group A" pumps (smaller bearing frame).

| Clearance (diam) | Head | Efficiency |
|---|---|---|
| Std (0.9 mm) | — | — |
| 2 mm | −0.7% | −1.5% |
| 3 mm | −1.2% | −2.9% |

It must be pointed out that 3.0 mm of diameter clearance is a very severely worn out clearance. The axial thrust exerted on the impeller is towards the driver, as there is more shrouded area on the front of the impeller than on the back (Figure 14). That is why the front shroud is partially trimmed and has the form of a star. Note that wear of the running clearance does not affect axial thrust. Wear of the rear cover face will produce a counter thrust away from the driver, reducing total axial thrust on the bearings.

## SEAL CHAMBER DESIGN

Recent studies [8, 11] have clearly demonstrated that the seal face temperature plays a predominant role in seal life. Tests per-

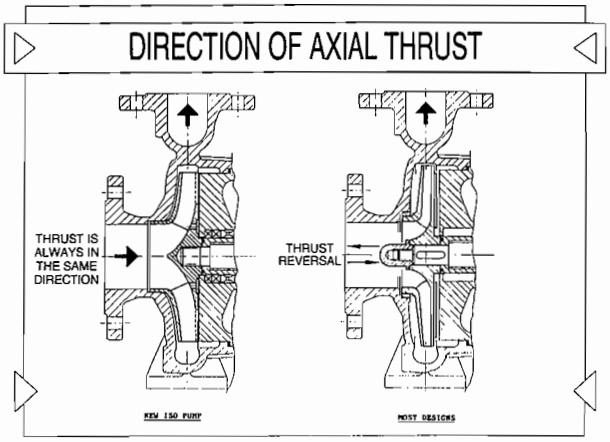


*Figure 14. Direction of Axial Thrust.*

formed on several pump configurations have shown that the best conceptual design for single acting mechanical seals was the "enlarged tapered seal chamber," as represented in Figure 15.

Battilana recommends this type of configuration for ANSI-API pumps [8].

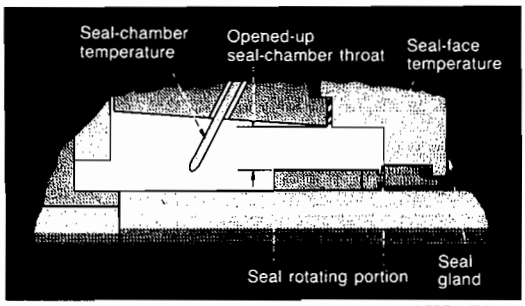


**A recommended seal-chamber configuration for ANSI-API pumps**
The figure above shows a conceptual seal-chamber design that overcomes the shortcomings of the conventional stuffing box. This housing design would eliminate the wasted space of the conventional box, and provide more clearance for the seal outside diameter and more room outside the housing for multiple seals. Obviously, such a housing would not be suitable for packing.

*Figure 15. Typical Enlarged Seal Chamber Design [8].*

The advantages of such a seal chamber design are multiple.

*Self Venting*

The tapered chamber bore assures a proper gas venting, so that air or gases cannot be trapped in the seal chamber.

*Heat removal*

Although the power absorbed by the friction of the seal faces is dependent on many factors, it is not unusual to find seals that absorb more than 300 W. This flow of energy needs to be evacuated from the seal chamber, otherwise the temperature will build up and there will be a risk of vaporization. The enlarged tapered seal chamber provides an outstanding heat exchange pattern, so that the seal faces can run cooler without the need for external seal flush. The obviation of the need for a seal flush is also a major advantage; it is well known that many seal failures are due to improper operation of the seal flush lines (closed valves, etc.). Battilana reports a 26°C reduction in seal faces temperature when using an enlarged tapered seal chamber [8].

*Centrifugation*

Because the liquid is rotating in the seal chamber, the centrifugal force will move away from the seal any abrasive particles.

The same benefits also applies to ISO pumps, and that is why the new ISO pump features a special rear cover developed for single seals only, in collaboration with several seal manufacturers.

The "type S" rear cover is represented in Figure 16. It has all the advantages of the recommended "enlarged tapered design," plus a few additional ones:

- *Integral design*—There is no seal chamber cover, and the seal is fitted in place from the impeller end. This improves concentricity, facilitates assembly and disassembly and reduces the number of parts. It also makes the seal's rotating assembly more accessible: the sleeve can be taken away without touching the rear cover, just by removing the impeller.

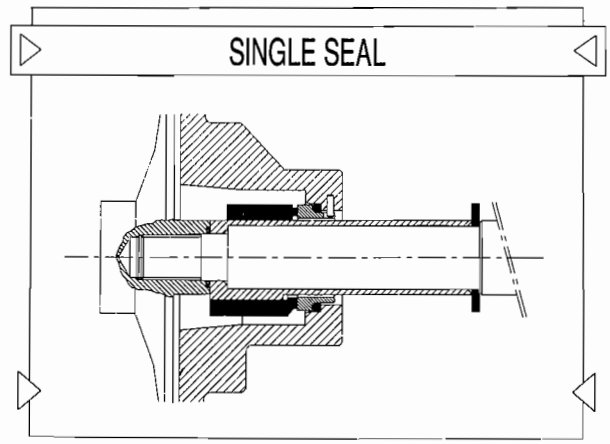


*Figure 16. Typical Arrangement for Single Seals.*

- *Pre-engineered for secondary sealing*—By adjusting a standard follower flange, it is possible to provide a "quench," or a "vent and drain" auxiliary system. It must be noted that the dimensions of the throttle bushing meet the dimensions of the DIN 24960 standardized seats, so it is also possible to do a "tandem" sealing with this configuration (Figure 17).

One very important point related to this "enlarged tapered" design is that it is likely to be more effective with an impeller fitted with balance holes than with an impeller fitted with "back vanes." On the latter, the heat is not removed from the seal

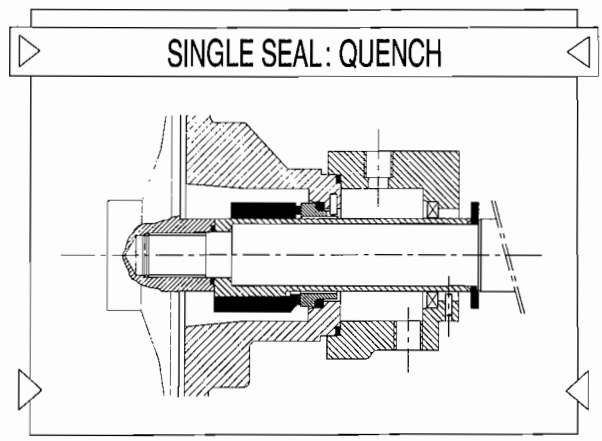


*Figure 17. Secondary Sealing (Quench, V&D, or Tandem).*

chamber because there is no escape route back to suction through balance holes.

Even on the smaller models, the leakage flow through the balancing holes is always higher than 2.0 to 3.0 gpm which is more than enough to evacuate all the heat.

It is interesting to comment on para 2.7.1.11 of API 610, regarding the use of throat bushings. The predominant concern of API is to make sure that there is enough pressure in the seal chamber to prevent vaporization. This danger of vaporization is quite important in the petroleum industry where a lot of volatile liquids are handled. It is not so much the case in the chemical industry where, in most applications, there is enough margin between the operating temperature and the boiling point.

The risk of vaporization is usually associated with the temperature buildup in conventional seal chambers. As the "enlarged tapered" seal chamber design also limits the temperature buildup, the risk of vaporization is also reduced. Therefore, it is questionable whether throat bushings should be mandatory for chemical process duties, as suggested by API 610.

Another sealing arrangement used in severe duties is the "reverse" seal represented in Figure 18. It uses the same type of enlarged seal chamber, and features a seal with a rotating seat. The spring assembly is fully isolated from the pumped liquid, and the seal faces are closer to the impeller balance holes. It represents an efficient solution to difficult applications such as very erosive or corrosive liquids, and might become a new DIN standard in Germany. One of its drawbacks is that some modifications on the pump need to be done.

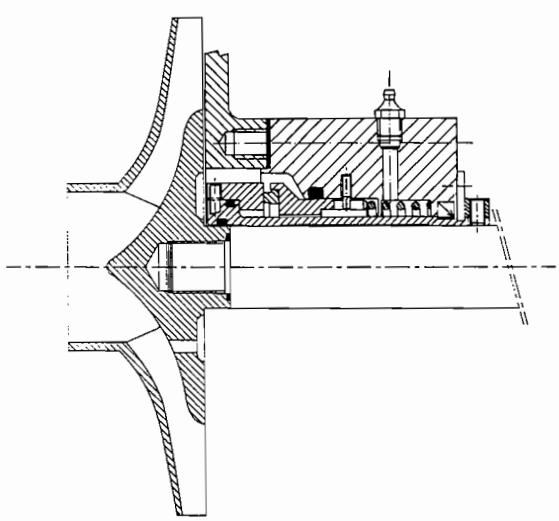

*Figure 18. Reversed Seal Arrangements.*

## SLEEVED OR INTEGRAL SHAFT

The question whether sleeved or solid shafts should be used does not have one global answer, as each solution has its benefits and drawbacks. Therefore, it was decided that the new ISO pump would be offered with both options, depending on the specific needs or wishes of the user.

*Sleeved shaft* (Figure 7). The classical "hook" type sleeve are considered here.

*Advantages*

- Avoids wear on the shaft, so only the sleeve must be replaced, not the shaft
- Easier to provide the sleeve in highly alloyed materials whose mechanical strength is not always compatible with the stresses occurring in a shaft
- Allows advantage to be taken of the mechanical strength of a carbon steel shaft, as the latter is not in contact with the pumped liquid
- Different sleeves of various outside diameters can be fitted on the same shaft to accommodate several seal sizes
- Easier to set the seal rotating assembly on a sleeve than on a shaft.

*Disadvantages*

- Addition of tolerance between shaft and sleeve reduces overall concentricity
- Shaft diameter at the overhang is smaller than with solid shaft
- If the impeller gasket fails, the shaft/sleeve interface is exposed to the pumped liquid, and there is a leakage flow out of the pump
- If a cartridge seal must be fitted, the hook type sleeve is useless. Furthermore, there is a risk of galling between the hook sleeve and the sleeve of the cartridge seal.

*Integral solid shaft* (Figure 19)

*Advantages*

- Further reduces shaft deflections, as OD of the overhang is larger—better concentricity
- Easier to fit a cartridge seal
- Easier to assemble the pump
- No escape route between shaft and sleeve, so one potential source of leakage is eliminated.

*Disadvantages*

- The shaft needs to be made in higher alloys (duplex or 316 stainless steel)
- Not recommended for pusher type seals
- Has its limitation for very corrosive liquids (solid shaft cannot be made in CN7M)
- Needs to replace the whole shaft in case of wear
- Not so easy to set the rotating assembly on the shaft.

There are some duties where the choice is easy:
*Solid shaft*—Recommended for metal-bellow seals (no wear on the shaft) and for cartridge seals, providing the shaft's metallurgy is compatible with the pumped liquid.
*Sleeved shaft*—Recommended for very corrosive applications and for pusher-type seals.

## BEARING HOUSING ASSEMBLY

The respective requirements presented in Table 1 compare API, ANSI, and ISO 5199, with regard to bearing life L10.

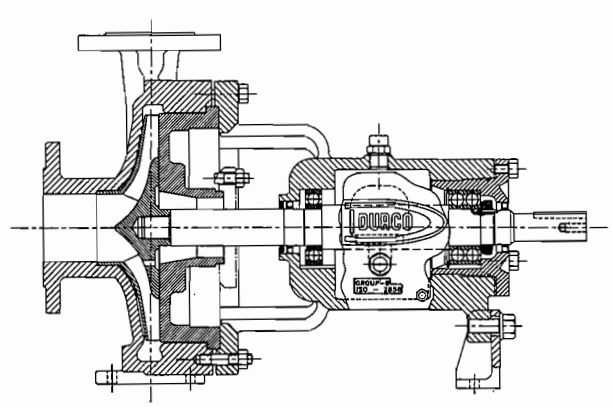


*Figure 19. Special Arrangement for Cartridge Seals.*

*Table 1. Comparison of Design Bearing Lifes.*

| | CONDITION 1 | | CONDITION 2 |
|---|---|---|---|
| API 610, 7th Ed. | 25,000 hours at rated (a) conditions | AND | 16,000 hours at max. axial and radial loads at rated speed |
| ANSI B73.1 | For sizes AA through A70. 17,500 hours at max. (b) load. | OR | For sizes A80 and longer. 17,500 hours at design (c) load. |
| ISO 5199 | 17,500 hours within the allowable operating range. | | NONE |

(a) rated condition=point at which the performances are certified.

(b) maximum load=with the largest impeller, at the highest speed and S.G.=1.0.

(c) design load=maximum load on the largest impeller, at the highest speed, but within the manufacturer's specified range.

L 10,h=number of operating hours that 90% of the bearings will exceed, under the specified loading conditions.

It is interesting to note that ANSI appears to be the more stringent standard for the small sizes, even tougher than API 610. ANSI always refers L10 lifes to maximum speed and maximum impeller dia. Even though the L10 figure of condition one is smaller for ANSI than API, it is applicable in much higher loading conditions.

One must not forget that ISO pumps are meant to operate at 50 Hz, so the same number of operating hours corresponds to a smaller number of cycles when running at 50 Hz. It is easier for the pump designer to reach a high L10 life at 50 Hz than it is at 60 Hz!

Looking at the basic formula for the calculation of L10:

$$L10=\left(\frac{1{,}000{,}000}{60\ \mathrm{RPM}}\right)\left(\frac{C}{P}\right)^3$$

for ball bearings where:
C=dynamic load capacity
P=resulting loading

Assuming that both axial and radial loads decrease with the square of the rotational speed, we see that:

$$\frac{L10,\ 50\ \mathrm{Hz}}{L10,\ 60\ \mathrm{Hz}}=\frac{60}{50}\,(1.44)^3=3.58$$

So, a pump designed for L10 = 25,000 hours at 60 Hz is likely to have a theoretical L10 higher than 90,000 hours when derated at 50 Hz. In practice, the bearing will most probably fail earlier because of oil contamination.

Para 2.9.1.5 of API 610 specifies that outboard bearings shall be of the duplex, 40-degree angular contact (7000 series), installed back to back. This requirement addresses the need found in petroleum processing to cope with high and reversible axial thrusts. These severe conditions are found when high suction pressure, or cavitating conditions, are encountered.

The new ISO pump bearings are designed to meet the API L10 life at 50 Hz. The double row angular contact outboard bearing (without filling slots such as recommended by para 2.9.1.4 of API 610) of the 5300 series has very low internal clearances, limiting shaft end-play to less than 0.03 mm. It must be noted that the *Pump Handbook* suggests a maximum of 0.05 mm axial endplay [12]. This reduces axial vibrations and limits the pressure fluctuations on the seal faces, assuring a longer seal life. Although this parameter has a significant impact on seal life, it must be pointed out that API, ANSI, and ISO do not specify a maximum allowable endplay.

Appropriate lubrication is obtained by adjusting the oil level to the center of the lower ball. Four longitudinal slots are provided in the bearing carrier to ensure a proper connection between the space behind the bearings and the main sump. This solves the classical problem of the back bearing tending to overheat [13].

Both outboard and inboard bearings are located against shoulders on the shaft, so there is no need to measure their setting. Just heat them and slide them against the shoulder.

The inboard bearing is of the ball type and the outer cage is free to slide axially *vs* the bearing housing. This allows for differential thermal expansion and allows an easy dismantling of the shaft assembly (Figure 6 a).

As the axial thrust is directed towards the driver, it is transmitted by the outboard bearing to a stiff shoulder on the bearing carrier (Figure 7, 5). The conical type circlips only acts to hold the bearing in place. This is a major difference with most classical designs (Figure 19) where the thrust is directed towards suction, and is taken by a circlips.

Also, when high suction pressures are present, this creates an additional force towards the driver equal to the area under the seal faces times relative suction pressure. In the new ISO pump design, both hydraulic forces are in the same direction, while on most classical pumps, these two forces are opposite, so that they can eventually balance each other and provoke detrimental thrust reversal (Figure 20 b).

The bearing housing is specially protected against oil contamination (dust, humidity, acid condensations, metallic particles). It is well known that most bearing failures are caused by oil contamination, so a special attention has been paid to the design of

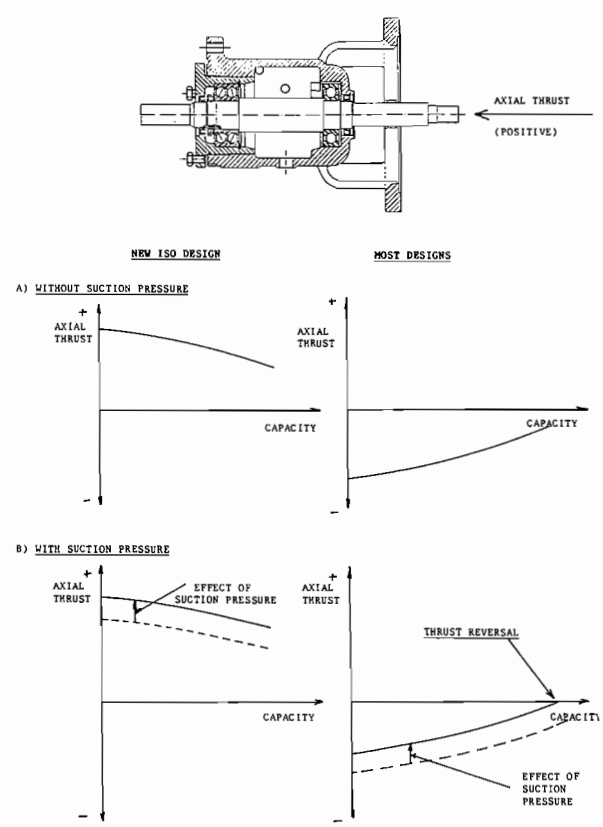


*Figure 20. Effect of Suction Pressure.*

the bearing housing. Double lip seals (Figure 7, 2) isolate both ends of the bearing housing. A filtered vent makes sure no abrasive particle enters the oil sump. A magnetic drain plug (Figure 7, 3) captures the metallic particles that could be present. Options such as labyrinth type oil seals and a membrane type breather are also available. Last, the combination of a constant level oiler and a sight glass indicator (Figure 7, 4) make sure the oil level and condition are correct.

## SHAFT

The well known "50 microns maximum shaft deflection criterion," is specified by all three standards (Table 2), but is applicable in different conditions. Comparing the requirements for shaft deflections, it appears that generally the ANSI requirement is tougher than the API:

*API*—max. 51 microns *total* shaft deflection, over the *full* range, with max. impeller dia and specified speed and fluid.

*ANSI*—for models AA through A70, max. 50 microns *dynamics* shaft deflection, over the *full* range, with max. impeller dia and *max. speed* and S.G. = 1.0.

So, for all duties with a SG lower than 1.0, the ANSI is slightly tougher than API.

ISO 5199 is slightly more permissive here, as the 50 microns are specified within the allowable operating range.

*Table 2. Shaft Deflections and Allowable T.I.R.*

| | API 610 | ANSI B73.1 | ISO 5199 |
|---|---|---|---|
| SHAFT SLEEVE T.I.R. | 50 microns | NO REQUIREMENT | 50 microns TO 80 microns |
| SEAL CHAMBER FACE TIR | 25 microns per inch of shaft diameter | 50 microns | NO REQUIREMENT |
| REGISTER FIT TIR | 127 microns | NO REQUIREMENT | NO REQUIREMENT |
| SHAFT DEFLECTION | 51 microns at max. impeller dia., duty speed, and over the whole range. | 51 microns at design load or max. load depending on size). | 50 microns within allowable operating range. |

All figures expressed in microns, unless otherwise specified.

Another parameter playing a predominant role in seal and bearing reliability, is the shaft (TIR) total indicator runout. It must be noted that this TIR is referenced to the face of the seal chamber, and not to the bearing bracket. This is sensible because the seat of the mechanical seal is positioned through the follower flange which is fitted on the rear cover [14].

The respective requirements of the three standards are compared in Table 2, and ISO 5199 is shown to be tougher here than ANSI B73.1, which does not have any requirement on shaft TIR. It is suggested that users should pay attention to this shaft runout, which is very easy to measure on any back pull out assembly, and which can differ substantially from one construction to the other.

It is suggested that this shaft sleeve TIR requirement compensates for the more permissive shaft deflection criterion of ISO 5199.

The new ISO pump was designed to address the need for improved concentricity, so that TIR measured on the shaft sleeve of the new ISO pump is always less than 50 microns. The result was obtained by combining the following elements:

- Integral bearing housing, without adapter piece (eliminates one mechanical fit)
- Direct register fit between rear cover and bearing bracket. Most designs center the rear cover *vs* the casing, and the casing *vs* the bearing bracket. By having a direct register fit between rear cover and bearing bracket, a better concentricity is achieved.
- Restricted machining tolerances on all piloting surfaces
- Direct metal-to-metal contact between the rear cover and the bearing bracket. Some designs still have a compression gasket between rear cover and bearing bracket.

Another important parameter recognized by the 7th edition of API 610 is the register fit of the seal chamber. API allows 77 microns (=125-50) additional TIR, due to the machining tolerances on the register, bringing the total TIR between shaft sleeve and seal chamber register to 127 microns.

One immediately sees another advantage of the integral rear cover design of the new pump. The obviation of the rear cover/follower flange connection further improves concentricity.

Basically, ISO is more restrictive than ANSI for the shaft TIR, but slightly more permissive for the shaft deflection. This addresses the fact that ANSI pumps run at higher speeds.

## CASING

All three standards call for a 3.0 mm corrosion allowance, which is provided in the new ISO pump.

The casing/cover interface is sealed by a confined compression gasket, made from a fully nonasbestos material, as recommended by API 610.

With regard to pressure rating, ANSI calls for a class 150 rating, which is equivalent to 275 psi (20 bar) for 316 stainless steel at ambient temperature. ISO 2858 calls for a pressure rating of at least 16 bar at 20°C for cast iron, steel and stainless steel.

API does not mention any minimum pressure rating, but specifies that the casing must be designed to withstand simultaneously its design pressure, plus the specified external forces and moments. In practice, most API pumps are rated at 40 bar or higher.

The API requirements for forces and moments are well known and quite tough, so tough that the 7th edition has slightly relaxed them, considering the fact that many API pumps could not meet the stiffness criterion of the 6th edition.

In its Annex A, API 610 7th edition now agrees to relax the requirement for forces and moments for those duties that fall within the limits of Table A-1 (Figure 21). It must be noted that about 85 percent of the chemical duties are within these limits.

It must nevertheless be recognized that, even on chemical duties, the pump stiffness is very important and that is why a stiffness criterion has been included in ISO 5199.

Like the API, ISO 5199 specifies, but *for cast steel pumps* only, a maximum displacement of the shaft end when the pump/baseplate assembly is subject to specified forces and moments. This stiffness criterion is of course less tough than API, but gives a good basis that could be considered by users as a substitution to API 610 requirement when Annex A is applicable.

Annex I shows a detailed calculation for a 32-160 ISO pump (equivalent to a 1½ × 1-6). As the methods of calculation are different from API, it was necessary to make some rough assump-

## APPENDIX A—NONCONFORMING PUMPS

### A.1 Application Limits

Typical application limits for pumps that do not require full compliance with Standard 610 are presented in Table A-1.

### A.2 Guidelines for Use

Pumps that do not require full compliance with Standard 610 should meet the requirements of the standard relative to metallurgy, mechanical seals, bearings, and auxiliary piping. Requirements that may be relaxed include those for allowable forces and moments, shaft deflection, inspection, testing, and documentation. Items that do not meet the requirements of this standard shall be listed in the vendor's proposal for approval by the purchaser. Both the purchaser and the vendor should evaluate possible effects on performance and reliability that might result from the use of such pumps.

Table A-1—Typical Application Limits for Pumps That Do Not Require Full Compliance With Standard 610

| Criterion | Value: Customary Units | Value: SI Units |
|---|---|---|
| Maximum discharge pressure | 275 psig | 1900 kPa (ga) |
| Maximum pump temperature | 300°F | 150°C |
| Maximum rated speed (+5% for turbine drives) | 3600 rpm | 3600 rpm |
| Maximum driver rating for horizontal end-suction or vertical in-line pumps | 100 hp | 75 kW |
| Maximum rated total head | 400 ft | 120 m |
| Maximum suction pressure | 75 psig | 500 kPa (ga) |
| Maximum impeller diameter for horizontal end-suction or vertical in-line pumps | 13 in | 333 mm |

*Figure 21. Appendix A, From API 610, 7th Edition.*

tions in order to make the comparison. The calculation shows that the ISO 5199 stiffness criterion is comparable to taking one third of the API moments.

The ISO pressure rating of 16 bar, as per ISO 2858, is very often a limitation:

- In many plants, particularly in U.K., flange drillings and ratings as per ASA class 150 are very often specified. While it is no problem to provide a class 150 flange on an ISO pump, it often necessitates to upgrade the pump rating to 20 bar (as class 150 corresponds to 20 bar for steel at ambient temperature).
- At 2900 rpm, all pumps with a 315 mm impeller are close to 160 meters of head at shutoff. If the specific gravity is higher than 1.0, or if suction pressure is above atmosphere, the 16 bar pressure rating will not be sufficient.
- As the allowable stress of 316 stainless steel decreases very rapidly with temperature, the pump rating also does. For instance, at 150°C, there is a 22 percent reduction to be applied on the pressure rating. Therefore, in order to have a pressure rating of 16 bar at 150°C, it will be necessary to have a rating of at least 20 bar at ambient temperature (for stainless steel DIN 17445 WN 1.4408).
- The 16 bar rating leads to relatively thin casing wall thickness and subsequently the overall casing stiffness is limited, and usually lower than an ANSI pump.

Therefore, it was decided that the new ISO pump would be designed for a nominal pressure of 25 bar* (PN25), thus exceeding the ISO requirement.

It must be noted that several so called "light duty API pumps" are also rated at 25 bar.

The major benefit of the PN25 rating might be found in extra mechanical seal and bearing life. Pump components are less distorted by external forces and moments, seal faces remain perpendicular, vibrations are more effectively damped. Last, increased thickness means longer life of components when chemical corrosion is present.

## WHICH STANDARD TO SPECIFY?

A comparison is shown in Table 3, between API 610, 7th edition, ANSI B73.1 (1984), and ISO 5199. This table shows that, for several parameters, API 610 is actually less stringent than ISO 5199 or ANSI B73.1:

- For all models designed to run at 2900 rpm
  - shaft deflections for small sizes
  - jackets design pressure (see parameter $n_o$ 3)
  - need for an external impeller adjustment system
  - allowable vibrations at 2900 rpm (see parameter $n_o$ 20)
  - back pull out capability (see parameter $n_o$ 5)

Obviously, API 610 is the more conservative standard for most design parameters, and therefore an upgraded chemical pump needs to be designed to meet several API requirements, particularly:

*Table 3. Comparison API-ANSI-ISO.*

| N° | PARAMETER | API 610, 7th EDITION | ANSI B73.1M-1984 | ISO 5199 | NEW ISO PUMP DESIGN | NEW PUMP MEETS: API | ANSI | ISO |
|---|---|---|---|---|---|---|---|---|
| 01 | Design for mechanical seal | 2.1.7 "pumps designed for mechanical seals shall use throat bushing, wear rings, impeller balance holes . . . " | No mention | No mention | Features a special seal chamber design for mechanical seal. Uses balance holes but not throat bushings. | YES | -- | -- |
| 02 | Stable head curves | 2.1.11 "continuously rising curves to shut off are preferred, and required for parallel operation" | No mention | 4.1.1 "Pumps with a stable characteristic curve are preferred" | Head/capacity curves are continuously rising towards shut-off. | YES | -- | YES |
| 03 | Jackets design pressure | 2.1.21 "max. allowable working pressure is 5.2 bar g" | 4.2.5 "min. operating pressure of 7.0 bar g at 170 °C" | 4.4.4.3 "operating pressure of at least 6.0 bar g at 170 °C" | Jackets designed for 7.0 bar g at 170 °C. | YES | YES | YES |
| 04 | Prevention of oil contamination | 2.1.24 "housings shall be designed to minimize contamination" | 4.7.5 "construction shall protect the bearings from water, dust, . . . " | 4.12.5 "all openings shall be designed to prevent the ingress of contamination" | Double-lip seals; magnetic drain plug, filtered vent, sight glass+oiler. | YES | -- | YES |
| 05 | Back pull-out capability | 2.2.7 "casings shall be designed to permit removal of the rotor without disconnecting the suction or discharge piping" | 4.3.4 "design shall permit back removal of the rotating element without disturbing the suction and discharge connections or the driver" | 4.4.4.1 "back-pull-out construction shall be preferred" | Design obviates the need for wear parts to be fitted in the casing, so casing and motor can stay in place for all types of maintenance. | YES | YES | YES |

*Table 3. (Continued)*

| N° | PARAMETER | API 610, 7th EDITION | ANSI B73.1M-1984 | ISO 5199 | NEW ISO PUMP DESIGN | NEW PUMP MEETS API | NEW PUMP MEETS ANSI | NEW PUMP MEETS ISO |
|---|---|---|---|---|---|---|---|---|
| 06 | Casing rigidity | 2.2.8* "pump's pressure casing shall be capable of withstanding double the forces and moments of Table 2, plus internal pressure" | No mention | No mention | Casing is stiffer than required by the 16 bar g rating, but is not designed for para 2.2.8 of API 610. | NO* | -- | -- |
| 07 | Centerline supporting | 2.2.9 "centerline supporting shall be used for temperatures above 177 °C" | 4.3.3 "casing shall be supported by feet" | 4.4.4.7 "centerline mounting should be considered above 175°C" | Standard construction is foot-mounted. Optional centerline mounting is available. | YES (Option) | YES | YES |
| 08 | Studs or capscrews | 2.2.15.4 "studs are preferred to capscrews" | No mention | No mention | Only 316 SS studs are used for connection of the cover and follower flange. | YES | -- | -- |
| 09 | Flange rating | 2.3.1.3 "shall conform to ANSI . . . " | 4.2 "shall conform to ANSI" | 4.7 "flanges to ISO 2084 and/or ISO 2229 shall be provided" | Both ISO and ANSI flanges ratings and drillings are available. | YES (Option) | YES (Option) | YES (Option) |
| 10. | External forces and moments | 2.4 and 3.3.1.5.* "pump/baseplate shall be sufficiently stiff to limit shaft end displacement to values of Table 8" | No mention | 4.6 "when defined loads are applied to the pump, the shaft end displacement shall be less than . . . " (see Annex C) | Design exceeds ISO 5199. | NO* | -- | YES |
| 11. | Sleeves | 2.5.6 "shafts shall be provided with seal or packing sleeves" 2.5.7 "sleeves may be omitted on small horizontal pumps" | No mention | No mention | Both sleeved and solid shaft construction are available. | YES | -- | -- |
| 12. | Runouts and deflections | See table 2 | | | | | | |
| 13. | Wear rings | 2.6.1 "unless otherwise specified, renewable wear rings shall be furnished on both casing and impeller" | No mention | 4.9 "wear rings should be fitted where appropriate" | New concept obviates the need for wear rings; front annular clearances is 3-4 times the min. value recommended by API; back clearance with rear cover can be externally reset. | NO (Unless Approval) | -- | YES |
| 14. | Prevention of galling | 2.6.4 "wear surfaces shall have a 50 HBN difference in hardness" 2.6.6.2 "minimum running clearances are recommended" | No mention | No mention | Standard duplex stainless steel impeller has an 80 HBN difference with 316 stainless steel casing. Running clearances at the front is 3-4 times API. | YES | -- | -- |
| 15. | Balanced seals | 2.7.1.2 "mechanical seals shall be single-balanced . . Unbalanced seals shall be furnished when specified or approved" | No mention | No mention | Both balanced and unbalanced seals may be fitted in the standard construction. | YES | -- | -- |
| 16. | Radial clearance at the seal OD | 2.7.1.4 "minimum radial clearance is 3 mm" | No mention | No mention | Minimum radial clearance is always larger than 3 mm, even when using balanced seals. | YES | -- | -- |
| 17. | Register fit centering | 2.7.1.6 "the seal gland shall be centered with a register fit" | No mention | 4.13.3.4 "provision shall be made for centering the seal | Follower flange is centered versus the seal chamber with a register fit. | YES | -- | YES |
| 18. | Throat bushings | 2.7.1.11 "throat bushings shall be provided unless otherwise specified" | No mention | No mention | Throat bushings are optional. Standard arrangement for single seals in the tapered, fully open seal chamber. | YES (Option) | -- | -- |
| 19. | Throttle bushing | 2.7.1.13 "a non sparking fixed throttle bushing shall be provided for single and double seals" | No mention | 4.13.3.4 "where leakage must be avoided, an auxiliary seal will be necessary" | Throttle bushings in carbon or PTFE are available for single and double seals. | YES (Option) | -- | YES |
| 20. | Vibrations | 2.8.4.7 "measured at +/− 10% of rated point: unfiltered: 7.6 mm/sec peak, corresponding to 51 microns p.t.p. at 2900 RPM filtered: 5.1 mm/sec peak, corresponding to 34 microns p.t.p. at 2900 RPM | No mention | 4.3.2 "measured at rated speed and flow +/− 5% unfiltered at 2900 RPM up to size 65-315: 4.5 mm/sec RMS, i.e., 6.4 mm/sec peak" | | YES | -- | YES |
| 21. | Bearing life | See table 2 | | | | | | |
| 22. | Lip seals | 2.9.2.7 "bearing housings shall be equipped with replaceable labyrinth-type end seals and deflectors . . . ; lip seals shall not be used" | No mention | No mention | Standard design features a double-lip seal. Optional labyrinth-type seal is available. | YES (Option) | -- | -- |

*This requirement may be relaxed for medium duties, as defined in Appendix A of API 610

*Table 3. (Continued)*

| N° | PARAMETER | API 610, 7th EDITION | ANSI B73.1M-1984 | ISO 5199 | NEW ISO PUMP DESIGN | NEW PUMP MEETS API | NEW PUMP MEETS ANSI | NEW PUMP MEETS ISO |
|---|---|---|---|---|---|---|---|---|
| 23. | Motor rating | 3.1.4 Percentage of rated pump power<br>KW 18.5 125%<br>22 KW 55 115%<br>75 KW 110% | No mention | 4.2 Prime motor output, in % of rated pump power<br>At 10 KW 120%<br>At 25 KW 115%<br>At 100 KW 110% | Standard procedure for motor selection is ISO 5199. | YES (If Requested) | -- | YES |

*This requirement may be relaxed for medium duties, as defined in Appendix A of API 610

- Shaft runout.
- Bearings life.
- Control of the seal chamber pressure and balancing of the axial thrust with balance holes.
- Larger seal chamber dimensions.

It is also felt that the API requirements for a throat bushing are not always the best solution for chemical duties using single seals, particularly in the light of the new trends in seal chamber design.

API 610 is often specified in Europe on chemical process duties because, until the issue of ISO 5199 in 1986, there were no European design standards aimed at improving the pump reliability and safety, so API 610 was the only answer when reliability was a must.

When specified on chemical duties in Europe, API pumps are derated and the user is actually paying an extra premium for several features that he does not necessarily need:

- Extra wall thickness, as the pressure rating is far above the actual needs.
- A pair of duplex 40-degree, angular contact outboard bearings designed for high suction pressure.
- Often, a centerline mounting with pedestals not justified by the product temperature (API specifies the centerline mounting above 177°C, but most API pumps have standard centerline mounting).
- A throat bushing.
- Case and impeller wear rings.

API 610 now suggests purchasers to consider, within the limits of Table A-1 (Figure 21), nonconforming pumps where requirements for forces and moments and shaft deflections may be relaxed. It has been shown that the requirement for shaft deflections is anyhow specified in both ANSI and ISO 5199 standards.

It is suggested that, providing some specific requirements are added, ISO 5199 offers an acceptable and competitive alternative to API 610 for those applications in the European process industry which require more reliability than the regular "standardized" ISO process pumps.

The term "upgraded medium duty" process pumps have been used by several authors to designate those pumps with an increased reliability. It is possible to find upgraded versions of chemical process pumps, both in the ANSI and the ISO range, that are built to the same concept that exceed their respective standard (ANSI B73.1 or ISO 5199), so the ANSI and the ISO users, do get the same type of pump, no matter the nozzle size in inches or mm.

## ANNEX I—ISO 5199 - STIFFNESS CRITERION FOR A 32-160 ISO PUMP

The ISO 5199 stiffness requirement is at least equivalent to using one third of the MY and MZ of API 610, para 3.3.1.6, as will be demonstrated.

As only the stiffness criterion are compared here, the shaft displacements must be compared when the pump baseplate assembly is subject to MY and MZ. API specifies that MY and MZ should be applied *separately*, and that each corresponding shaft displacement should meet a certain limit.

ISO 5199 combines all moments and measures the total shaft displacement. For the ease of the comparison, assume that there is no correlation between the stiffness in the Y direction and in the Z direction, so the vectors of shaft displacements can be composed to obtain a total displacement in the (Y,Z) plane. It is recognised that this assumption can be challenged, but is needed to make a comparison.

Pump: 32-160
Suction: 50 mm
Discharge: 32 mm
Impeller dia: 160 mm

Systems of XYZ: as per API 610, 7th edition, Figure 4, page 11.

*One Third of API Moments*

$$\text{Suction: } M_{Y,S}=260 \text{ ft} \times \text{lb} \times 1/3 \times \left(\frac{1}{7.2182} \ \frac{\text{kg.m}}{\text{ft.lb}}\right)=12.0 \text{ kg.m}$$

$$M_{Z,S}=170 \text{ ft} \times \text{lb} \times 1/3 \times \quad '' \quad '' \quad = 7.8 \text{ kg.m}$$

*Resultant moment*

$$M=\sqrt{12^2+7.8^2}=14.3 \text{ kg.m at suction flange} \qquad (1)$$

Same calculation at the discharge flange

$$M=14.3 \text{ kg.m at discharge flange} \qquad (2)$$

With the above mentioned assumptions, the API criterion would limit the resultant *combined* shaft displacement, for a non-granted baseplate, to:

$\sqrt{52^2+127^2}=137$ microns (refer to API 610, 7th Ed, page 29[1])

## ISO 5199 CALCULATION

*(Refer to ISO 5199, Annex C, Figure 5) [1]*

## ANNEX C (from ISD 5199, Annex C)

*External forces and moments on flanges*

Forces and moments acting on the pump flanges due to pipe loads may cause misalignment of pump and driver shafts, deformation and overstressing of pump casing, or overstressing of the fixing bolts between pump and baseplate.

The piping forces and moments calculated by the purchaser for the piping system can be checked for acceptability as follows.

No matter how the forces and moments are applied and distributed at the pump flanges, their admissible values shall meet the formula:

$$\left(\frac{\Sigma F_v}{F_{v\,max}}\right)^2 + \left(\frac{\Sigma F_h}{F_{h\,max}}\right)^2 + \left(\frac{\Sigma M_t}{M_{t\,max}}\right)^2 < 1$$

where

$\Sigma F_v$, $\Sigma F_h$, $\Sigma M_t$ are simple sums of the real forces and moments applied to the pump flanges. These sums do not take into consideration the direction or the sense of the forces or moments, nor their distribution on each flange; $F_{v\,max}$, $F_{h\,max}$, $M_{t\,max}$ are the values given by the curves I, II and III and are valid for cast steel pumps at ambient temperature. Materials with mechanical properties lower than those of cast steel may require further restriction.

Attention shall also be paid to the fixing bolts and the allowable stress for the pump casing according to the mechanical properties of the materials used.

The above calculation method resulted from investigation by the European Committee of Pump Manufacturers (EUROPUMP) of pumps to ISO 2858.

With piping not connected to the pump and the casing not pressurized, loads are applied to the flanges of the pump; the shaft end displacement is then the acceptance criterion according to the following values:

- 0, 15 mm for pumps with shaft end diameter 24 mm;
- 0, 20 mm for pumps with shaft end diameter 32 mm;
- 0, 25 mm for pumps with shaft end diameter 42 mm;

and the curves given in figures 3 to 5 are obtained.

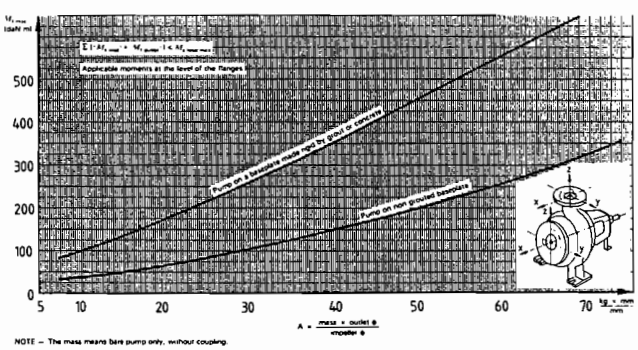


Figure 5 – Curve III – Total moment (cast steel pumps)

*Table 2. Nozzle Loadings (from API 610, 7th Edition).*

Note: Each value shown below indicates a range from minus that value to plus that value: for example, 160 indicates a range from −160 to +160.

| Force/Moment[a] | Nominal Size of Nozzle Flange (inches) | | | | | | | | |
|---|---|---|---|---|---|---|---|---|---|
| | 2 | 3 | 4 | 6 | 8 | 10 | 12 | 14 | 16 |
| Each top nozzle | | | | | | | | | |
| FX | 160 | 240 | 320 | 560 | 850 | 1200 | 1500 | 1600 | 1900 |
| FY | 200 | 300 | 400 | 700 | 1100 | 1500 | 1800 | 2000 | 2300 |
| FZ | 130 | 200 | 260 | 460 | 700 | 1000 | 1200 | 1300 | 1500 |
| FR | 290 | 430 | 570 | 1010 | 1560 | 2200 | 2600 | 2900 | 3300 |
| Each side nozzle | | | | | | | | | |
| FX | 160 | 240 | 320 | 560 | 850 | 1200 | 1500 | 1600 | 1900 |
| FY | 130 | 200 | 260 | 460 | 700 | 1000 | 1200 | 1300 | 1500 |
| FZ | 200 | 300 | 400 | 700 | 1100 | 1500 | 1800 | 2000 | 2300 |
| FR | 290 | 430 | 570 | 1010 | 1560 | 2200 | 2600 | 2900 | 3300 |
| Each end nozzle | | | | | | | | | |
| FX | 200 | 300 | 400 | 700 | 1100 | 1500 | 1800 | 2000 | 2300 |
| FY | 130 | 200 | 260 | 460 | 700 | 1000 | 1200 | 1300 | 1500 |
| FZ | 160 | 240 | 320 | 560 | 850 | 1200 | 1500 | 1600 | 1900 |
| FR | 290 | 430 | 570 | 1010 | 1560 | 2200 | 2600 | 2900 | 3300 |
| Each nozzle | | | | | | | | | |
| MX | 340 | 700 | 980 | 1700 | 2600 | 3700 | 4500 | 4700 | 5400 |
| MY | 260 | 530 | 740 | 1300 | 1900 | 2800 | 3400 | 3500 | 4000 |
| MZ | 170 | 350 | 500 | 870 | 1300 | 1800 | 2200 | 2300 | 2700 |
| MR | 460 | 950 | 1330 | 2310 | 3500 | 5000 | 6100 | 6300 | 7200 |

[a]F=force, in pounds; M=moment, in foot-pounds; R=resultant. See Figures 1-5 for orientation of nozzle loads (X, Y, and Z).

*Table 8. Stiffness Criteria for Pumps and Baseplates (from API 610, 7th Edition).*

| Loading Condition | Pump Shaft Displacement | | | | |
|---|---|---|---|---|---|
| | Baseplate Intended for Grouting | | Baseplate Not Intended for Grouting | | Direction |
| | Inches | Micrometers | Inches | Micrometers | |
| $MY_e$ | 0.003 | 76 | 0.002 | 51 | +Z |
| $MZ_e$ | 0.007 | 178 | 0.005 | 127 | −Y |

Note: $MY_e$ and $MZ_e$ equal the sum of the allowable suction and discharge nozzle moments from Table 2:

$$MY_e = (MY)_{suction} + (MY)_{discharge}$$
$$MZ_e = (MZ)_{suction} + (MZ)_{discharge}$$

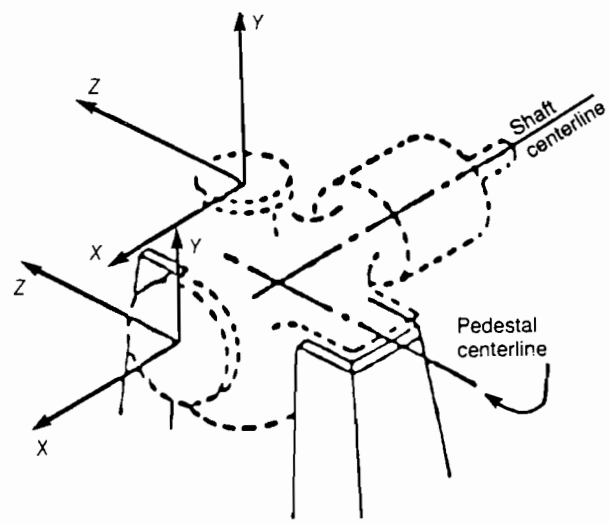


Figure 4—Coordinate System for the Forces and Moments in Table 2: Horizontal Pumps With End Suction and Top Discharge Nozzles

Curve III gives:

*ISO 5199 CALCULATION* (Refer to ISO 5199, Annex C, Figure 5)

Curve III gives:

$$A = \frac{\text{mass} \times \text{outlet dia}}{\text{impeller dia}} = \frac{49 \times 32}{160} = \frac{9.8\ \text{kg} \times \text{mm}}{\text{mm}}$$

$M_{T\,max}$=35 kg.m (read from curve III)
$M_{T,S}$ with 1/3 of API moments: 14.3 kg.m see above (1)
$M_{T,D}$ with 1/3 of API moments: 14.3 kg.m see above (2)
$M_{t,total} = |14.3| + |14.3| = 28.6\ \text{kg.m} \leq 35\ \text{kg.m} = M_{t,total\ max}$

The ISO 5199 stiffness criterion limits the total shaft displacement to 150 microns, when the pump is subject simultaneously to the allowable forces and moments.

In this case, the ISO 5199 stiffness criterion is to be met when the pump is subject to pure Mm and Mr moments, equivalent to ⅓ of API moments. As vertical and horizontal forces have to be applied simultaneously with the moments, this means that the ISO 5199 criterion is more stringent than taking ⅓ of API moments.

## NOMENCLATURE

*Subscripts*

S relates to suction nozzle
D relates to discharge nozzle
Y relates to "Y" direction, i.e. vertical
Z relates to "Z" direction, i.e. horizontal, perpendicular to shaft
T relates to combined Y and Z

## REFERENCES


1. API 610, 7th Edition, "Centrifugal Pumps for General Refinery Service," American Petroleum Institute (1989).
2. ANSI/ASME B73.1 M-1984: "Specifications for Horizontal End Suction Centrifugal Pumps for Chemical Process," American Society of Mechanical Engineers (1984).
3. ISO 2858, "End-Suction Centrifugal Pumps (Rating 16 Bar) - Designation, Nominal Duty Point and Dimensions," 2nd Edition (1975).
4. Reynolds, J. A., "Standard Pumps Are Not Obsolete!," Chemical Engineering (May 12, 1986).
5. ISO 5199, "Technical Specifications for Centrifugal Pumps—Class II," 1st Edition (1988).
6. DIN 24960, "Mechanical Seals; Cavities; Principal Dimensions, Designation and Material Codes" (1980).
7. ISO 3069, "End Suction Centrifugal Pumps—Dimensions of Cavities for Mechanical Seals and for Soft Packing," 1st Edition (1975).
8. Battilana, R. E., "Better Seals Will Boost Pump Performance," Chemical Engineering, pp. 106-110 (July 1989).
9. Stepanoff, A. J., "Centrifugal and Axial Flow Pumps," New York: John Wiley & Sons (1957).
10. Anderson, W. D., "Five Ways to Cool Bearings," Machine Design (September 22, 1983).
11. Davison, Michael P., "The Effects of Seal Chamber Design on Seal Performance," *Proceedings of the Sixth International Pump Users Symposium*, Turbomachinery Laboratory, Department of Mechanical Engineering, Texas A&M University, College Station, Texas (1989).
12. *Pump Handbook*, 2nd Edition, New York: McGraw Hill, pp. 9-91 (1986).
13. Summers-Smith, D., "Failures of Oil-Lubricated Paired and Double-Row Rolling Bearings in Centrifugal Pumps," I.Mech.E, Paper C139/80 (1980).
14. Fielder, R., "Dial Indicator Can Warn of Pump and Seal Problems," Oil and Gas Journal, pp. 175-179 (May 2, 1983).